BEAM TO HSS WITH TEE SECTION

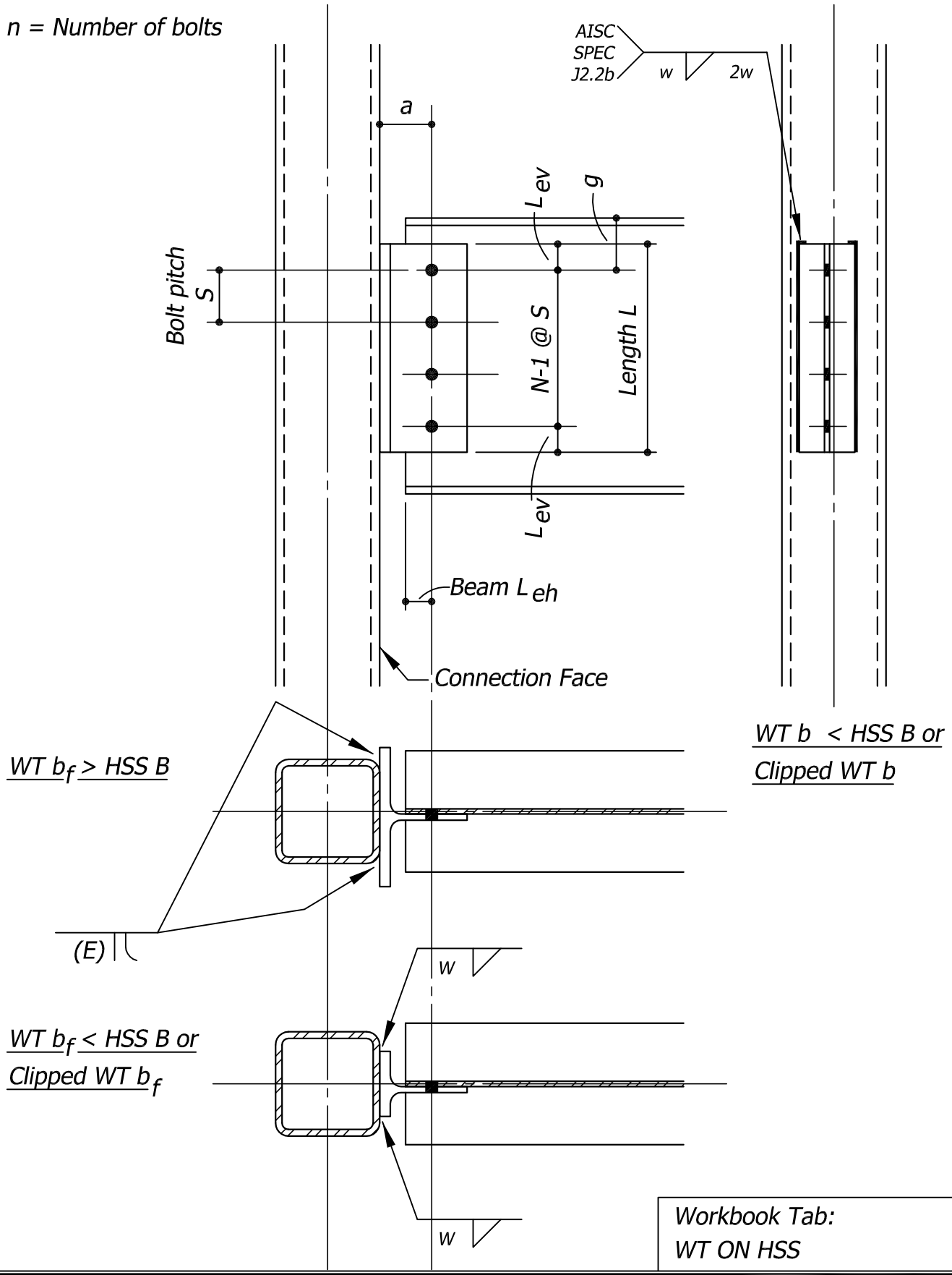

Workbook Tab:
WT ON HSS

HSS-TEE.DWG

BEAM TO HSS WITH SINGLE PLATE SHEAR CONNECTION

(2016 Conventional SPSC Design Procedure)

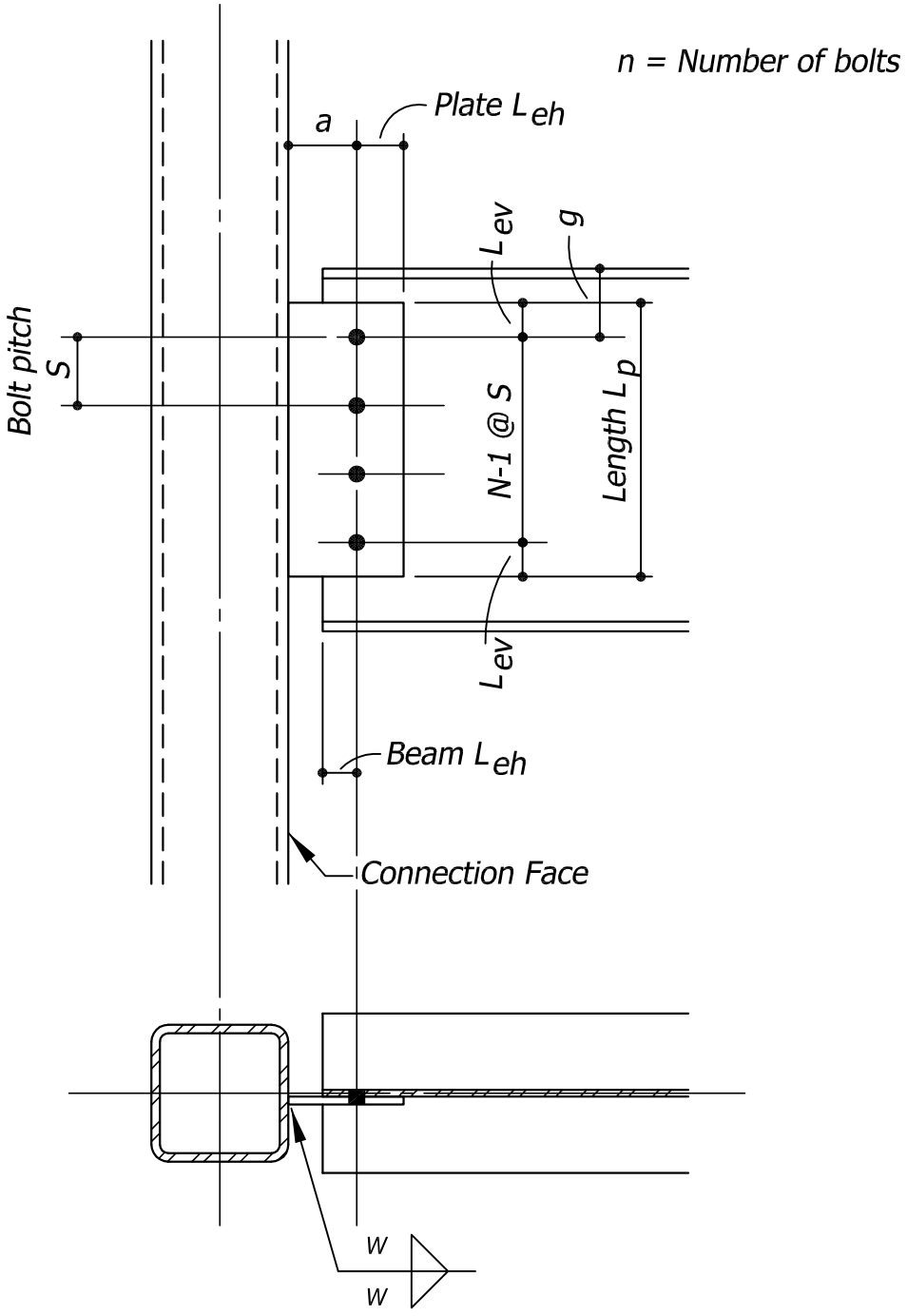

W = 5/8 x PLATE THICKNESS

HSS-SHEAR-TAB.DWG

Workbook Tab:
SINGLE PLATE TO HSS

BEAM TO WF WITH SINGLE PLATE SHEAR CONNECTION

(Conventional Configuration SPSC Design Procedure)

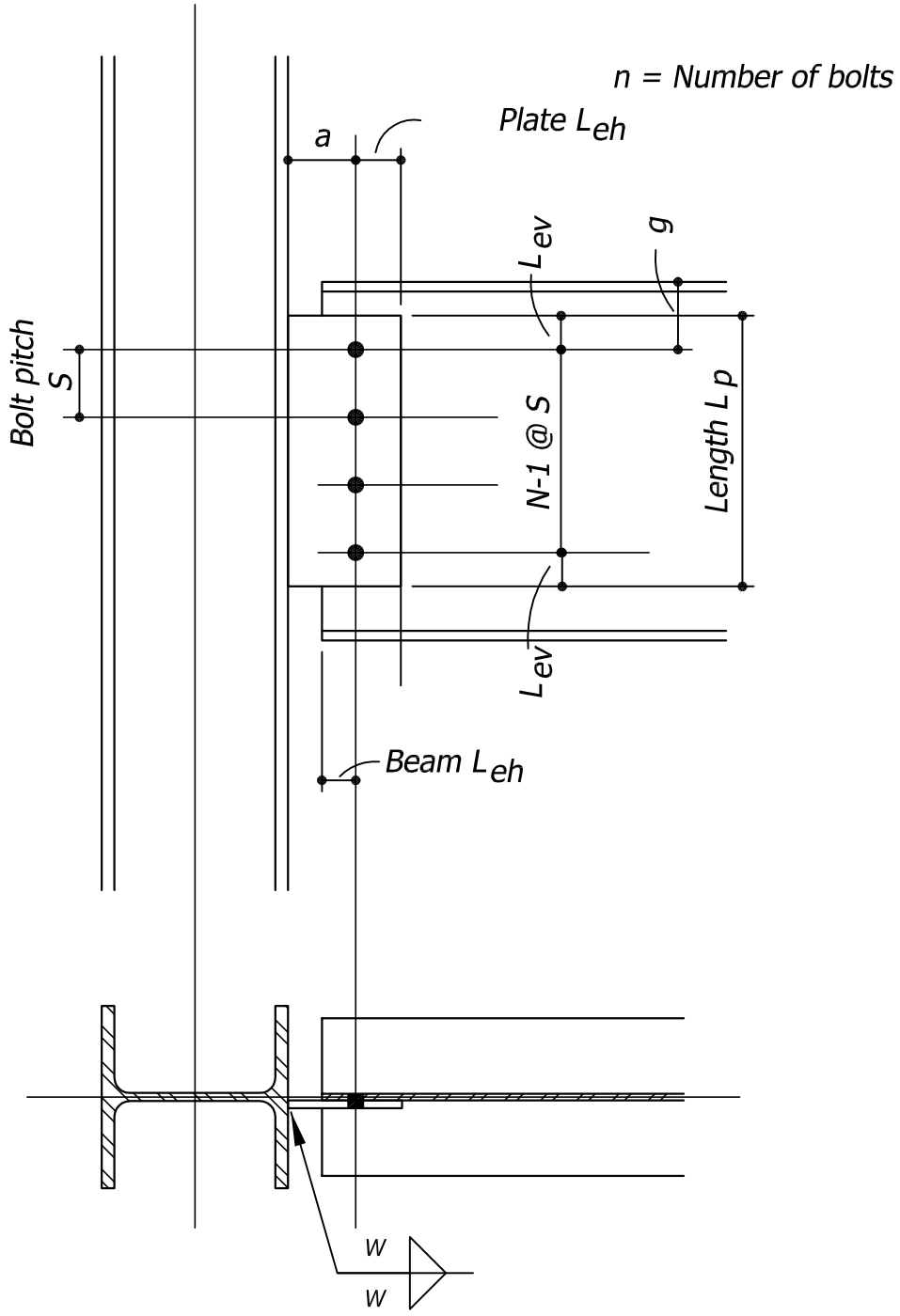

W = 5/8 x PLATE THICKNESS

W-SHEAR-TAB.DWG

Workbook Tab:
SINGLE PLATE TO W FLG

ISC BEAM TO WF W/ SINGLE PLATE SHEAR CONN.

(Conventional Configuration SPSC Design Procedure)

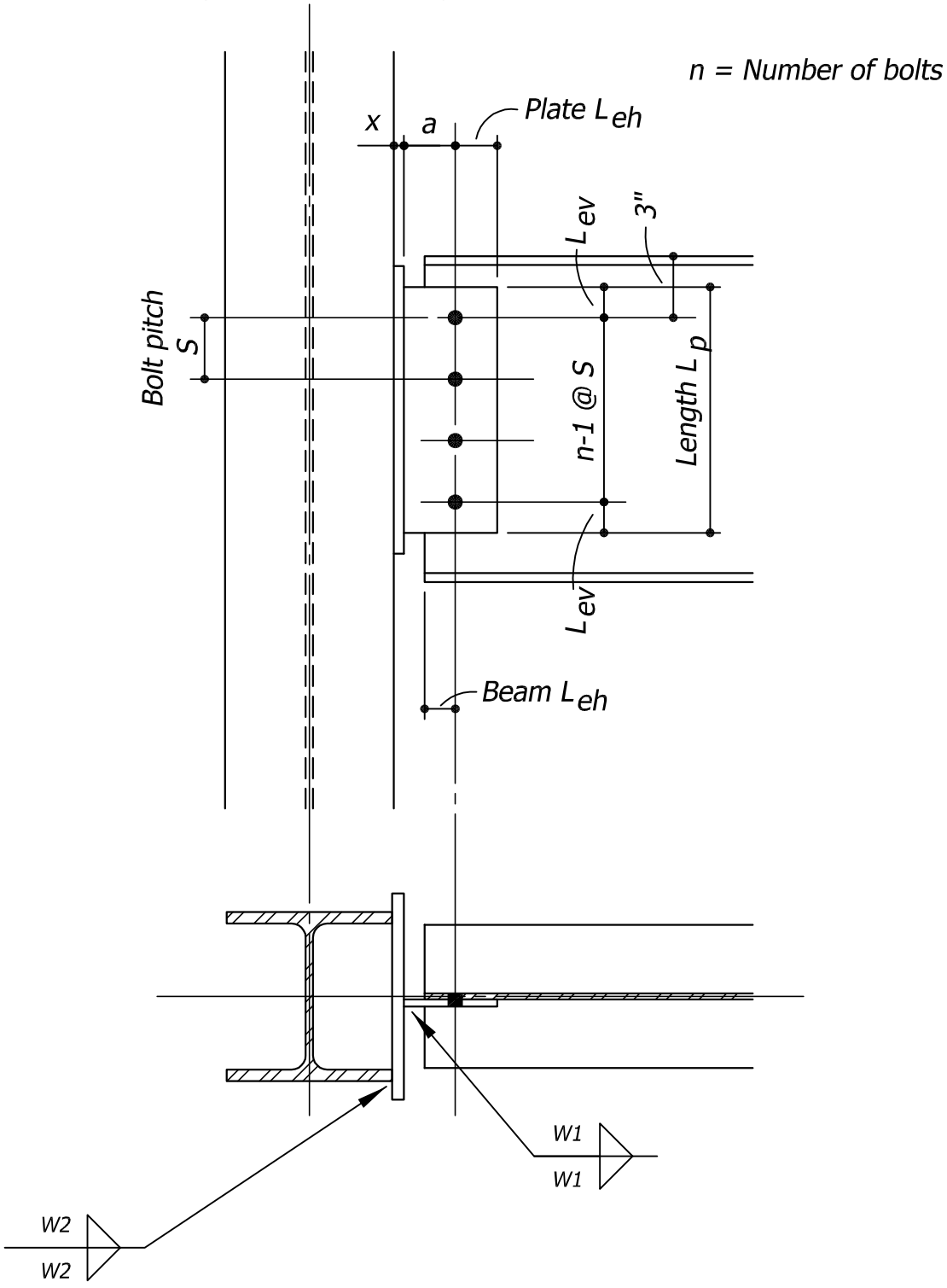

ISC-W-SHEAR-TAB-CF.DWG

Workbook Tab:
ISC SINGLE PLATE

BEAM TO WF WITH SINGLE PLATE SHEAR CONNECTION

(Extended Configuration SPSC Design Procedure)

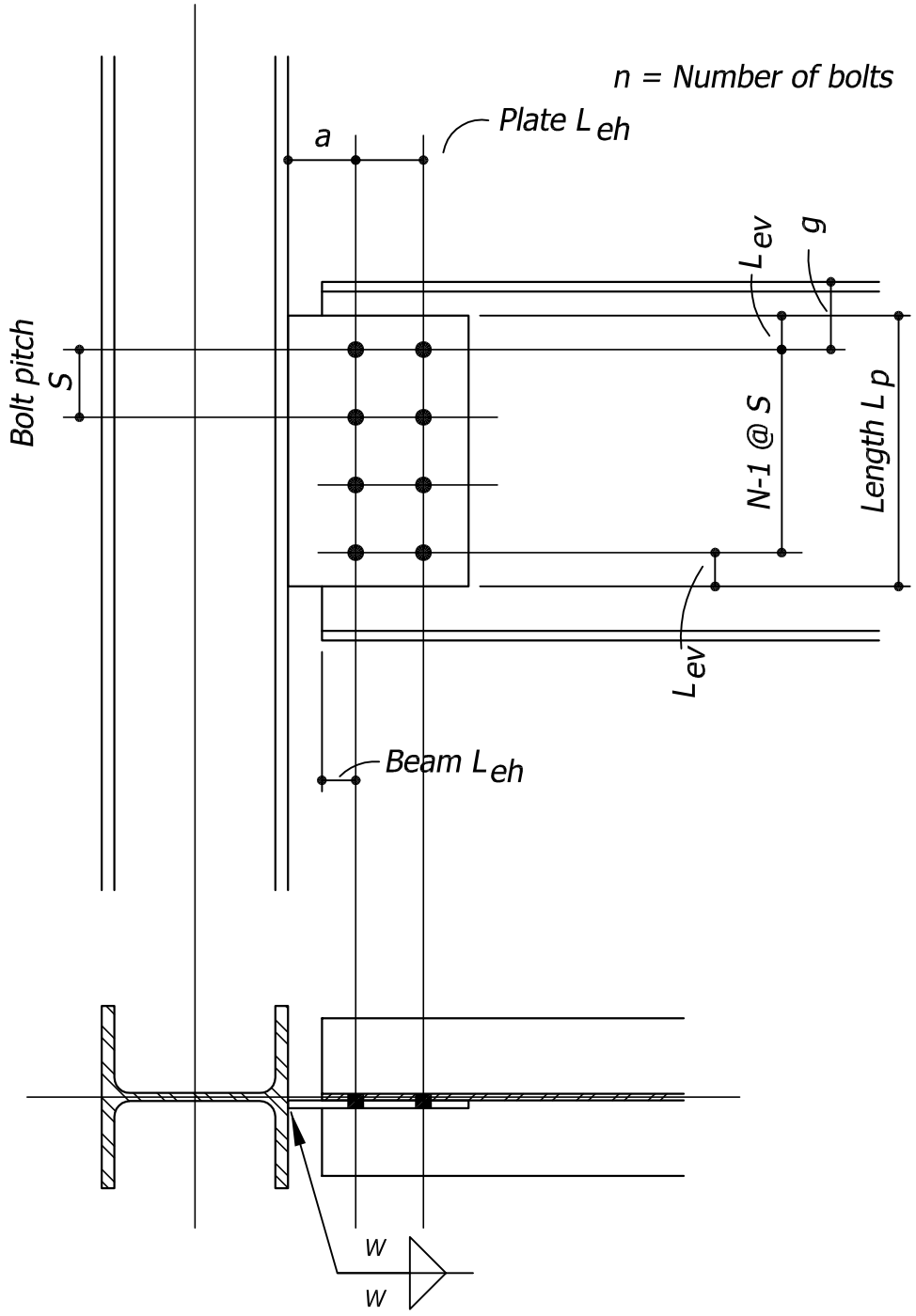

W = 5/8 x PLATE THICKNESS

W-SHEAR-TAB.DWG

Workbook Tab:
SINGLE PLATE TO W FLG

BEAM TO WF W/ EXTENDED SINGLE PLATE SHEAR CONN.

(Extended Configuration SPSC Design Procedure)

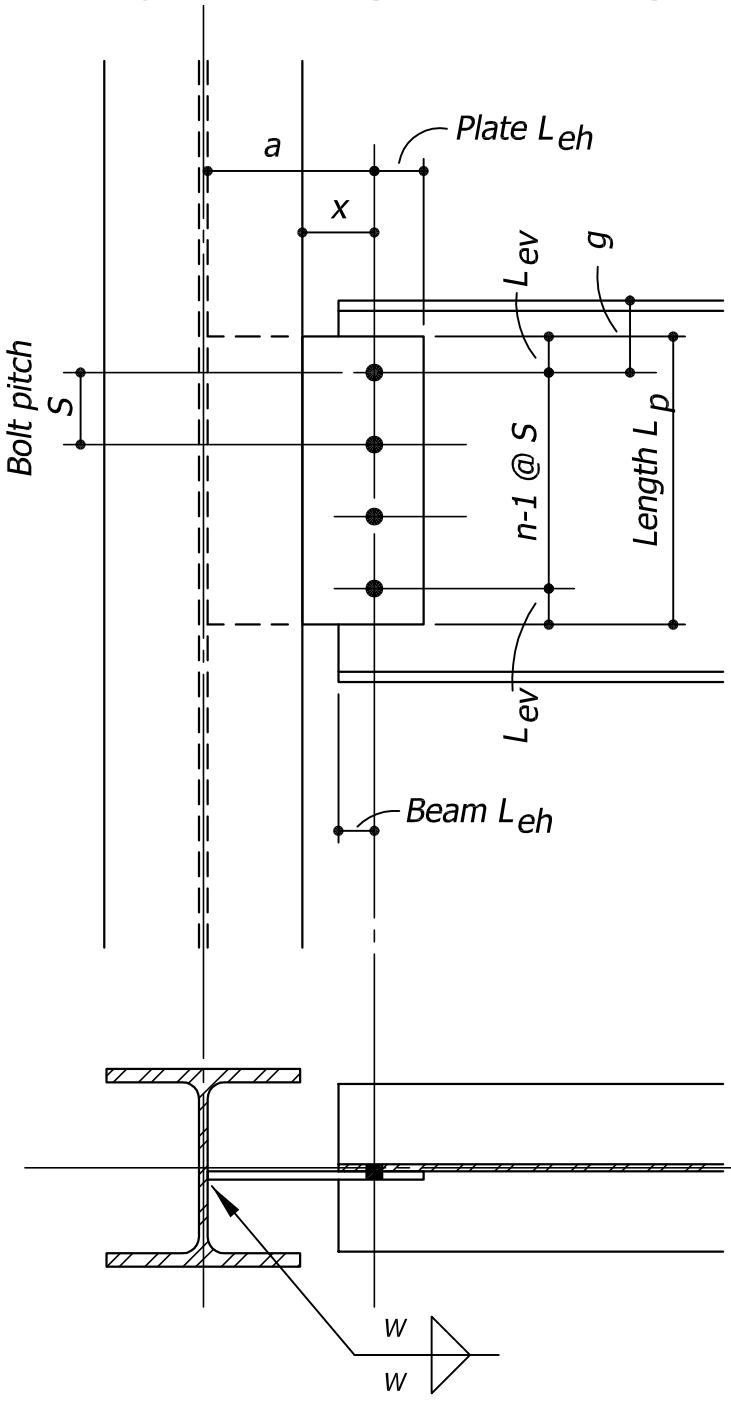

SUPPORTING MEMBER IS COLUMN

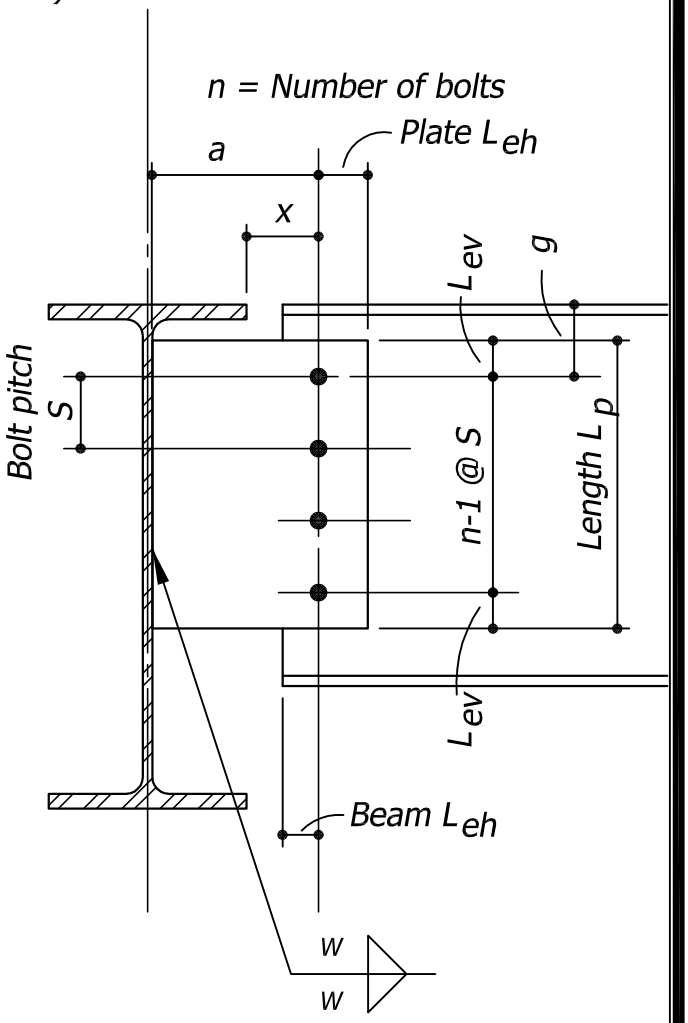

SUPPORTING MEMBER IS BEAM

W = 5/8 x PLATE THICKNESS

W-EX-SHEAR-TAB-COLWB.DWG

Workbook Tab:
EXTENDED SINGLE PLATE

BEAM TO WF W/ EXTENDED SINGLE PLATE SHEAR CONN.

(Extended Configuration SPSC Design Procedure)

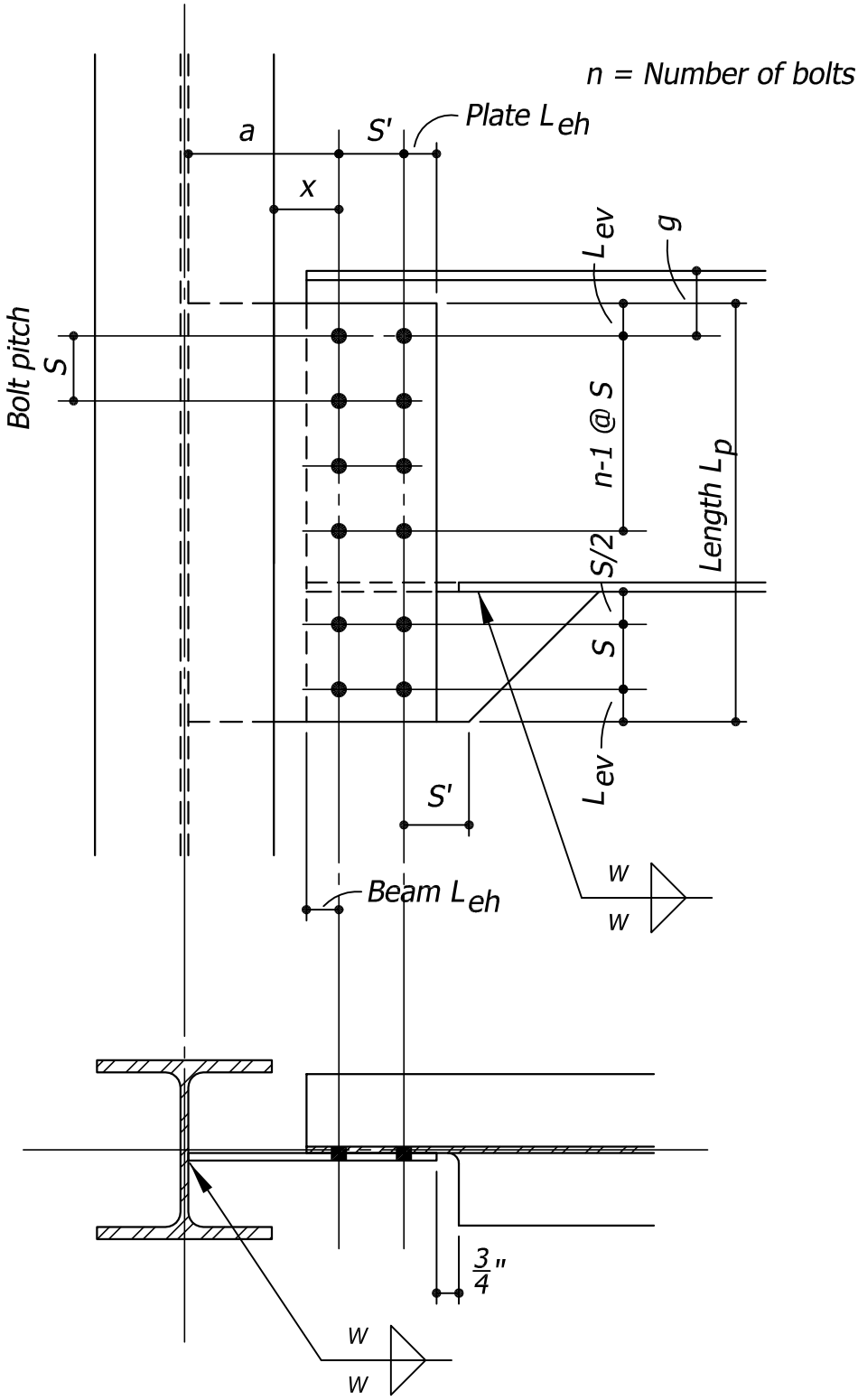

BEAM WEB EXTENSION

W = 5/8 x PLATE THICKNESS

Workbook Tab:
EXTENDED SINGLE PLATE

W-EX-SHEAR-TAB-COLWB-EXT.DWG

BEAM TO GIRDER WEB WITH
SINGLE PLATE SHEAR CONNECTION

(Conventional Configuration SPSC Design Procedure)

Beam d < Girder d

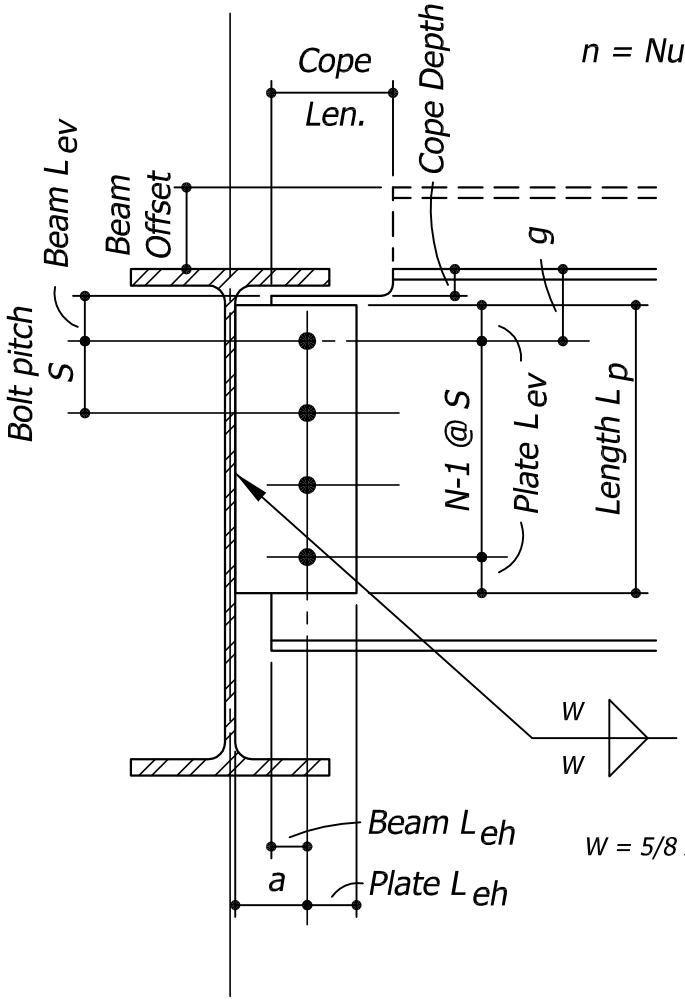

GIRDER-SHEAR-TAB-DWG

Workbook Tab:
SINGLE PLATE to GIRDER WEB

DEEP BEAM TO GIRDER WEB WITH SINGLE PLATE SHEAR CONNECTION

(Conventional Configuration SPSC Design Procedure)

n = Number of bolts

Beam d > Girder d

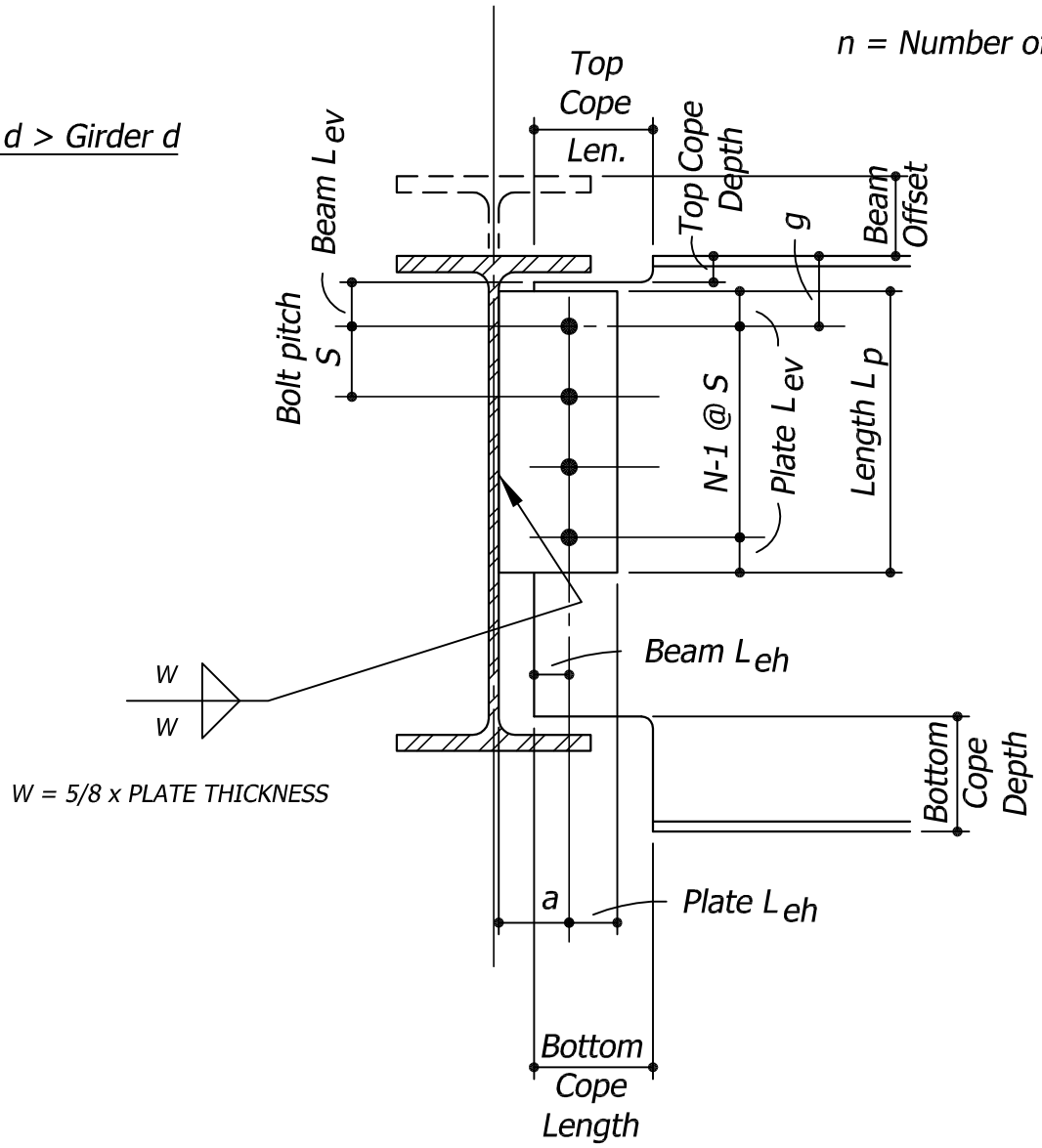

GIRDER-SHEAR-TAB1.DWG

Workbook Tab:
SINGLE PLATE to GIRDER WEB (D)

DOUBLE ANGLE WELDED TO BEAM, BOLTED TO SUPPORTING MEMBER

SUPPORTING MEMBER IS GIRDER

n = Number of rows of bolts

Beam d < Girder d

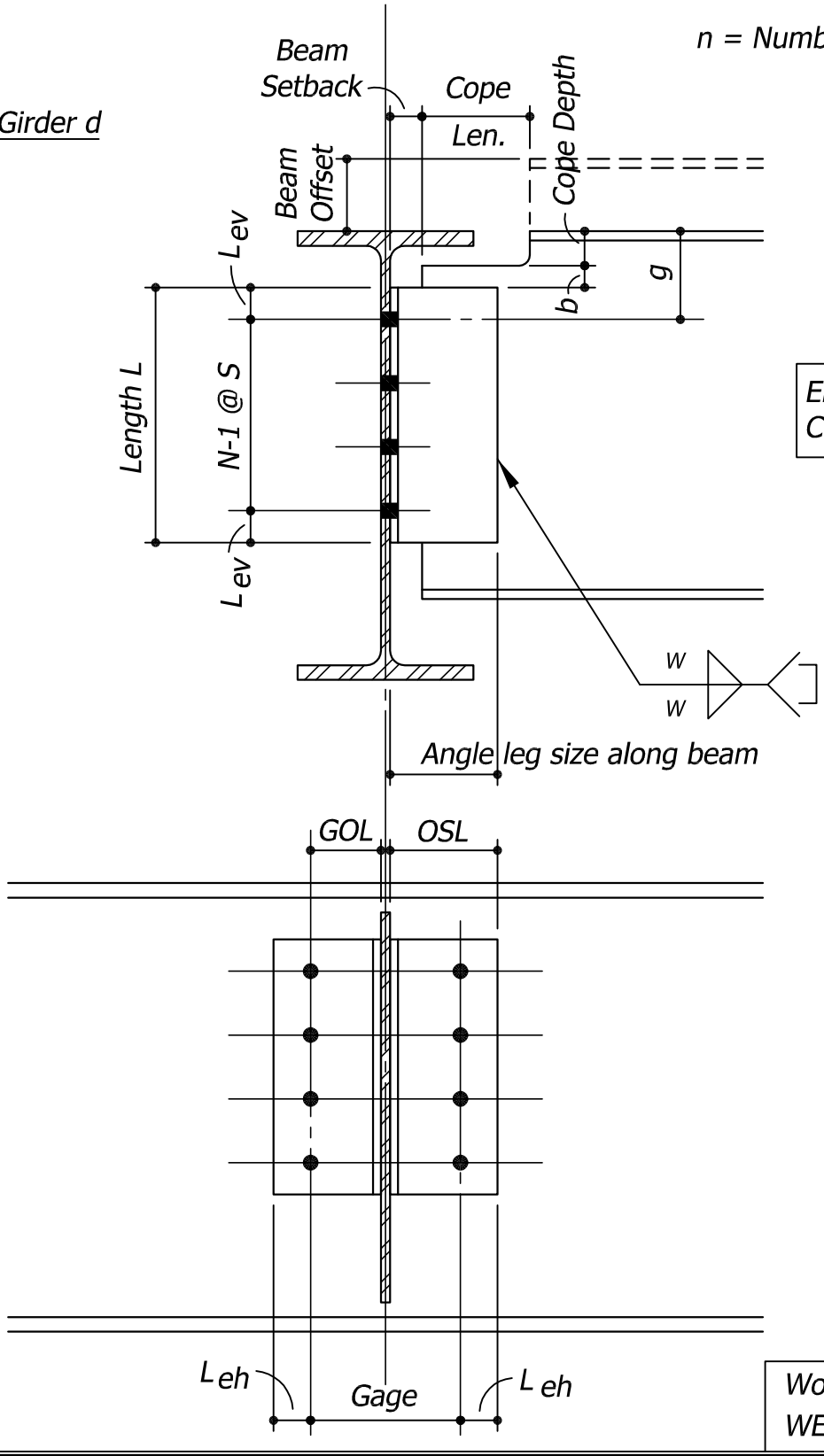

Enter 'B' in Cell J9.
Cell J10 is empty.

Workbook Tab:
WEB WELD-BOLT to WF

2A-WELD-BOLT-B.DWG

DOUBLE ANGLE WELDED TO BEAM, BOLTED TO SUPPORTING MEMBER

SUPPORTING MEMBER IS COLUMN FLANGE OR WEB

N = Number of rows of bolts

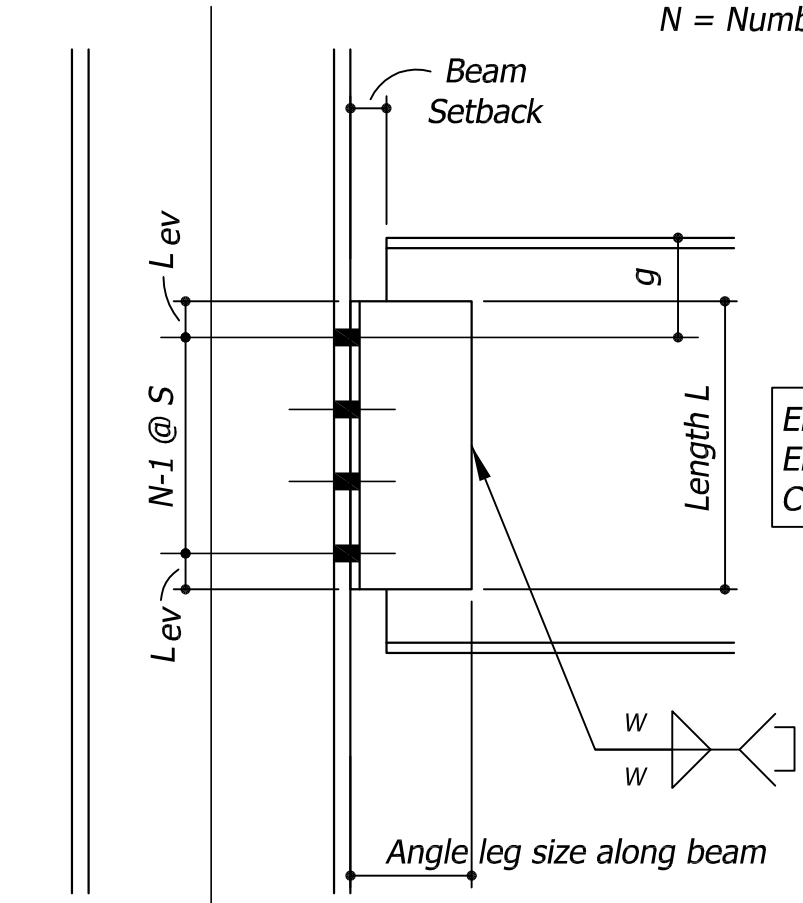

Enter 'C' in Cell J9.
Enter 'F' or 'W' in Cell J10.

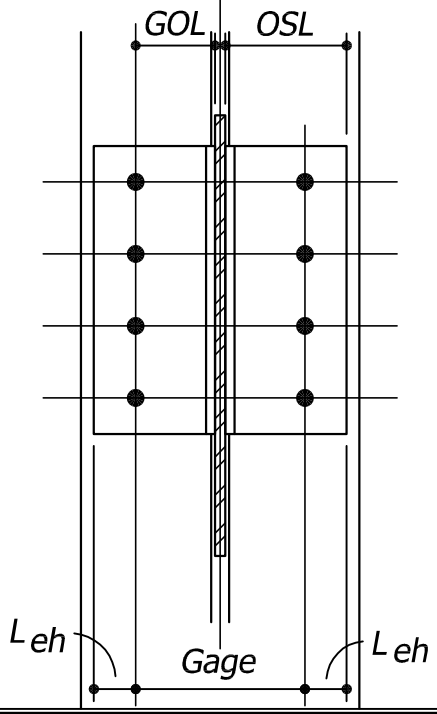

Workbook Tab:
WEB WELD-BOLT to WF

2A-WELD-BOLT-CF.DWG

DOUBLE ANGLE WELDED TO DEEP BEAM, BOLTED TO SUPPORTING MEMBER

SUPPORTING MEMBER IS GIRDER

N = Number of rows of bolts

Beam d > Girder d

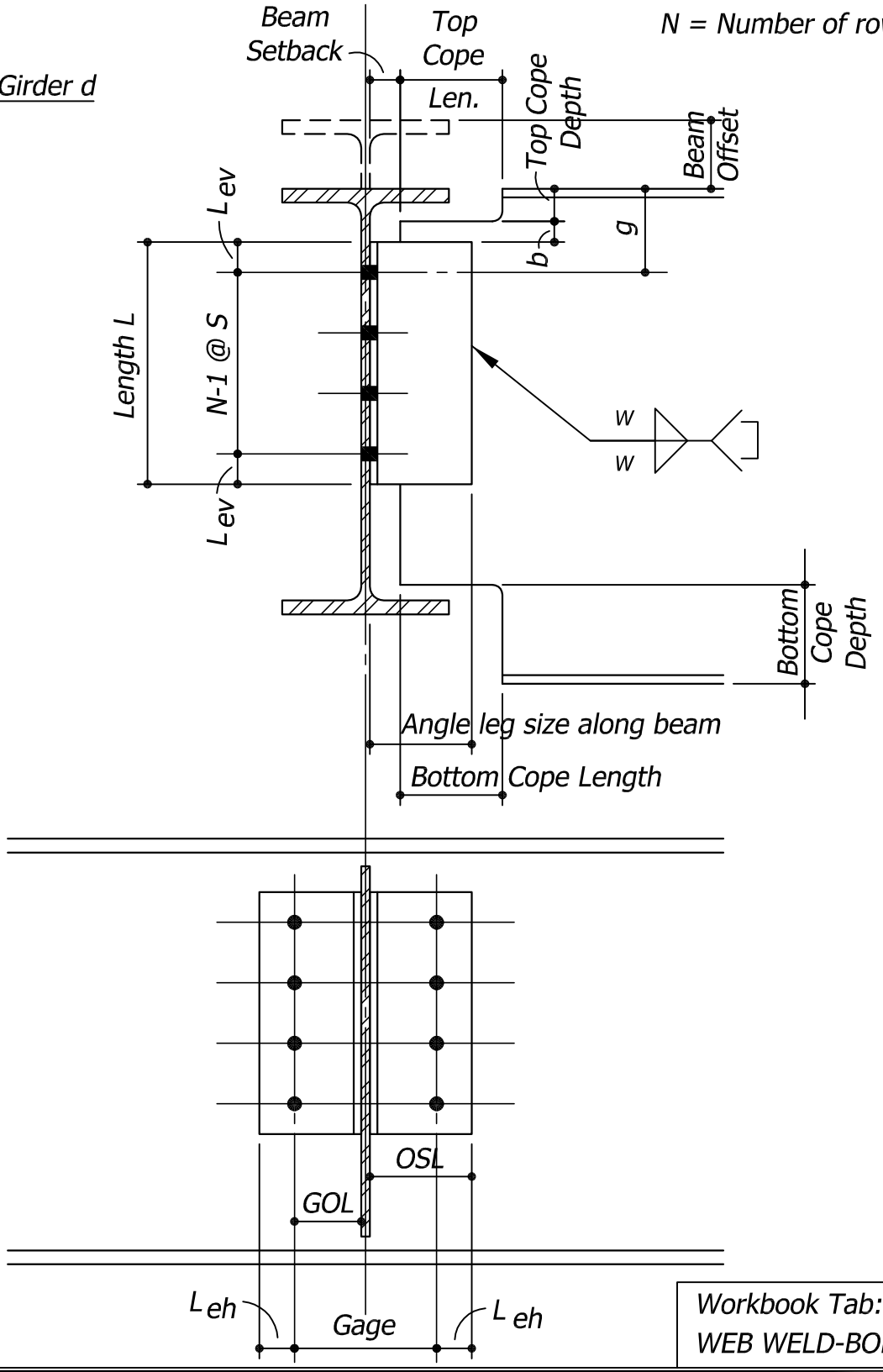

Workbook Tab:
WEB WELD-BOLT to WF (D)

2A-WELD-BOLT-B1.DWG

DOUBLE ANGLE BOLTED TO BEAM, WELDED TO COLUMN FLANGE

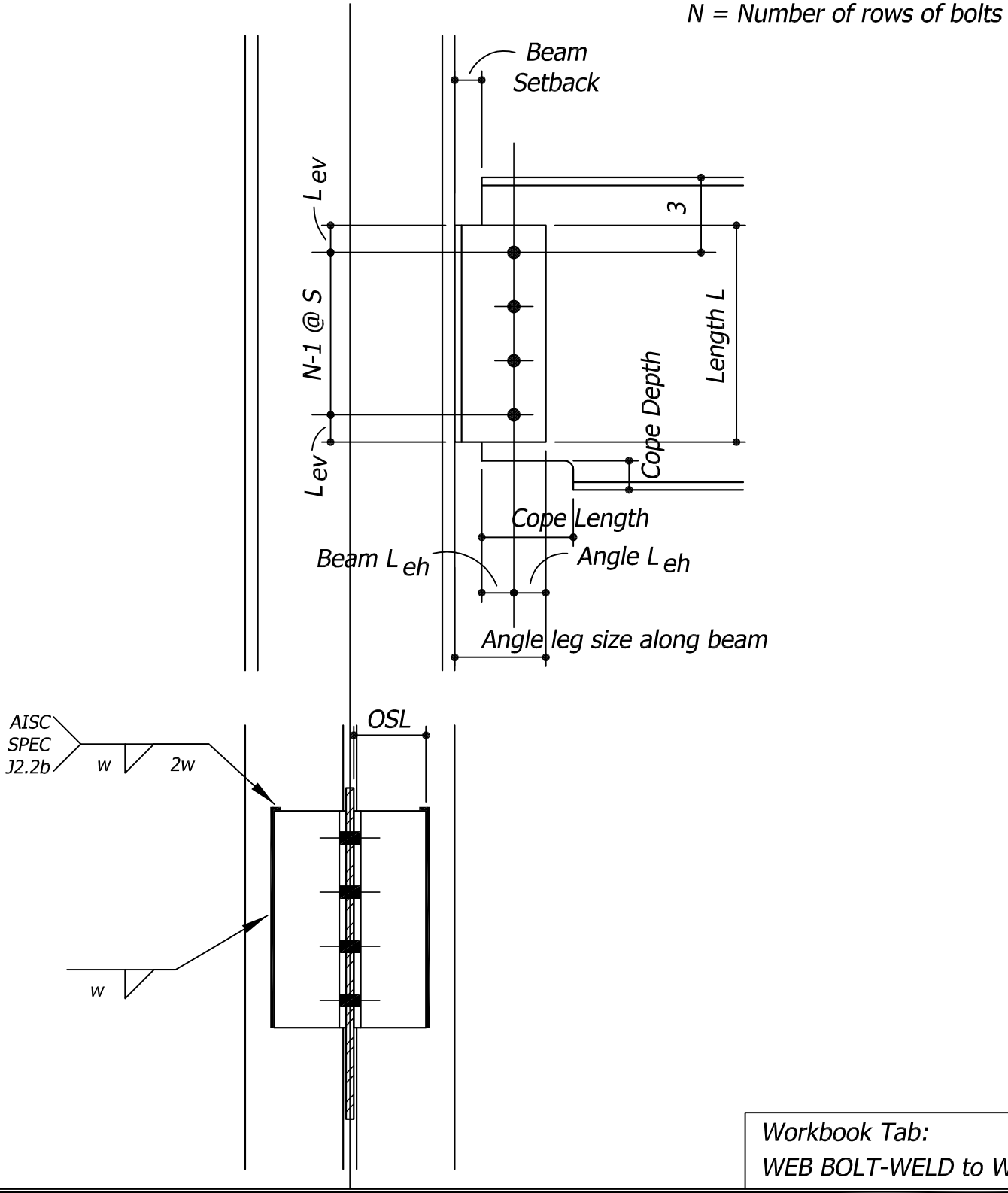

2A-BOLT-WELD-CF.DWG

Workbook Tab:
WEB BOLT-WELD to WF

DOUBLE ANGLE BOLTED TO BEAM, WELDED TO HSS COLUMN

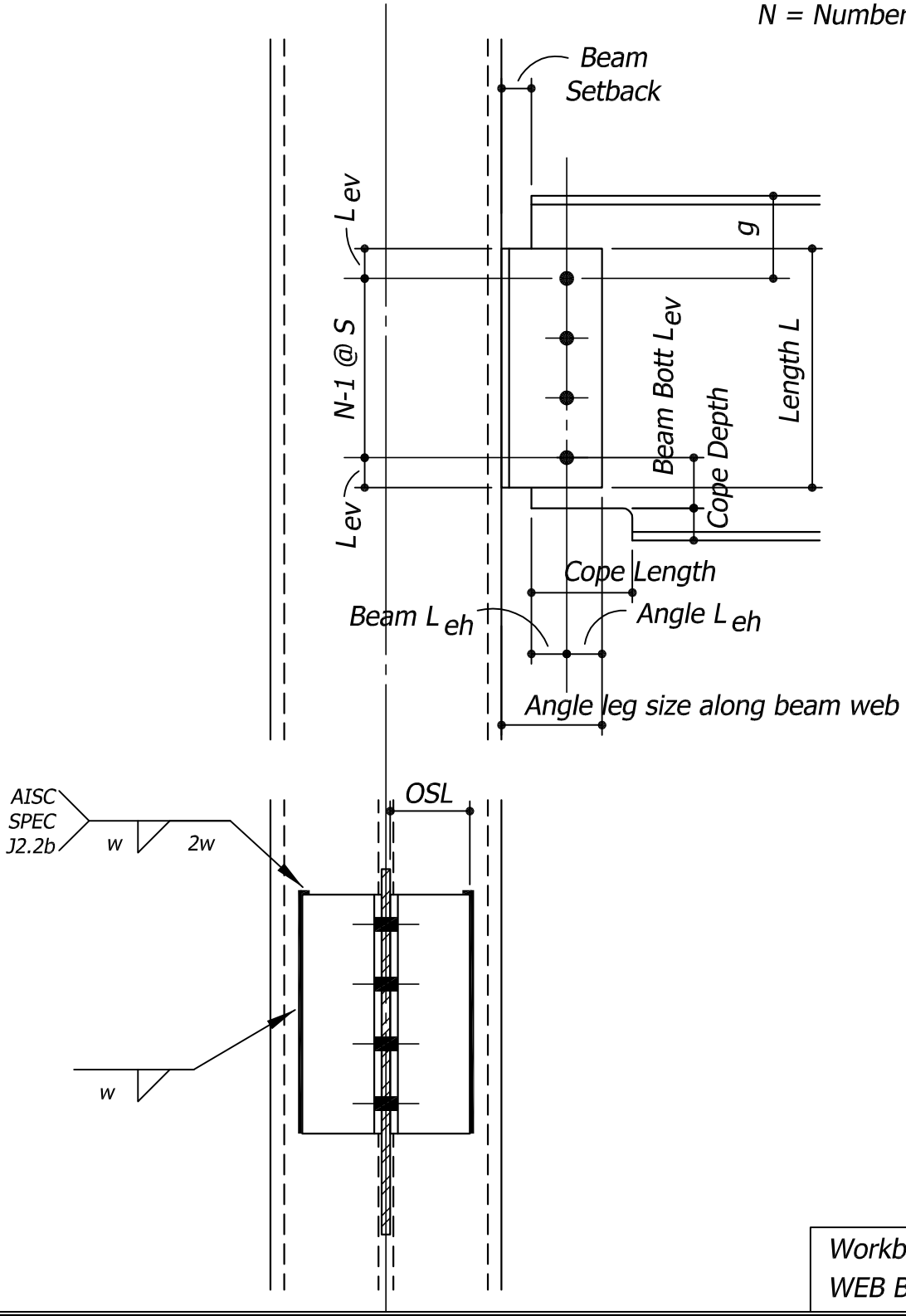

2A-BOLT-WELD-HSS.DWG

Workbook Tab:
WEB BOLT-WELD to HSS